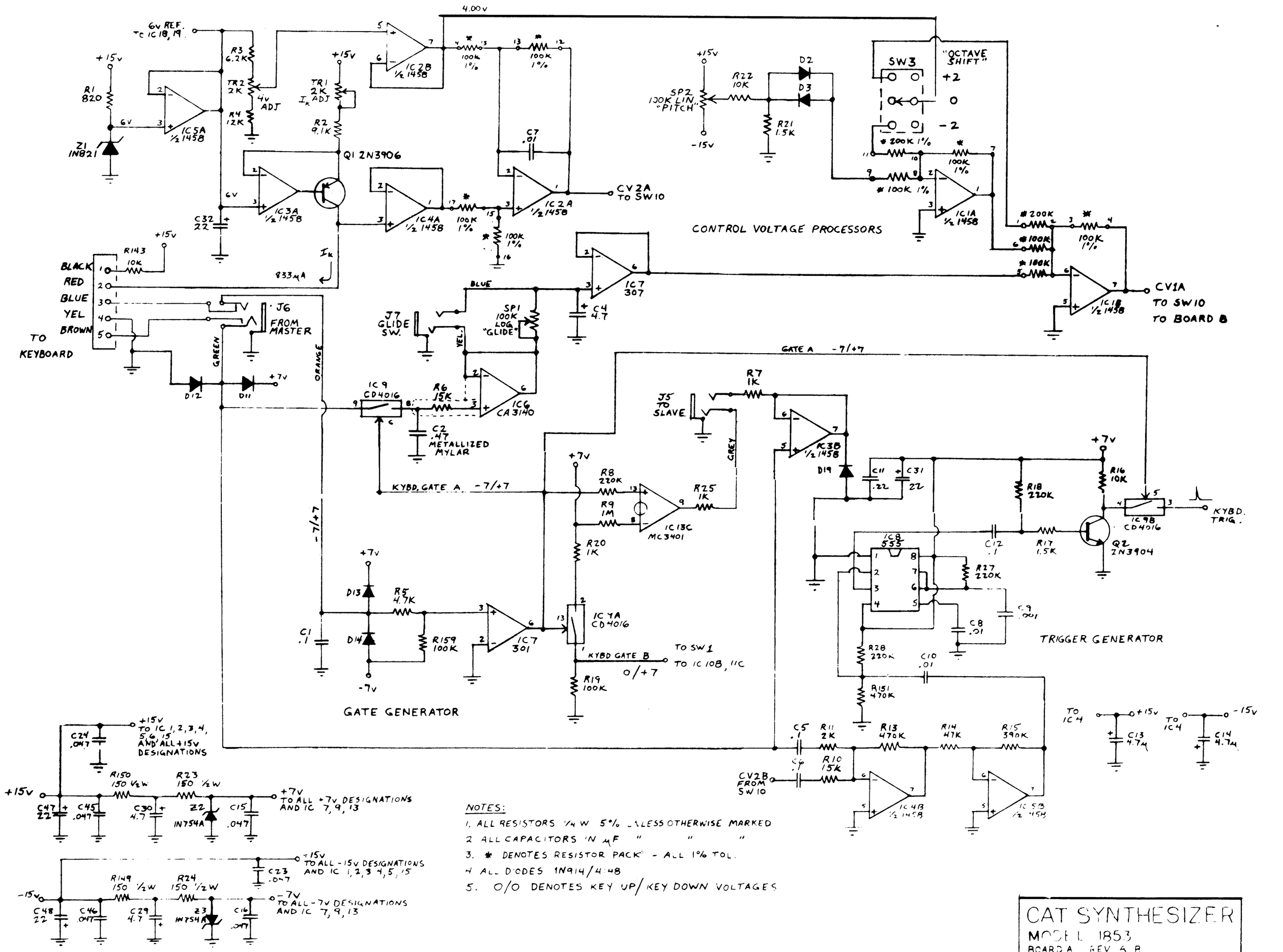

NOTES:

1. ALL RESISTORS 1/4 W 5% UNLESS OTHERWISE MARKED
2. ALL CAPACITORS IN μF " " "
3. * DENOTES RESISTOR PACK - ALL 1% TOL.
4. ALL DIODES 1N914/4148
5. 0/0 DENOTES KEY UP/KEY DOWN VOLTAGES

CAT SYNTHESIZER
MODEL 1853
BOARD A REV A, B