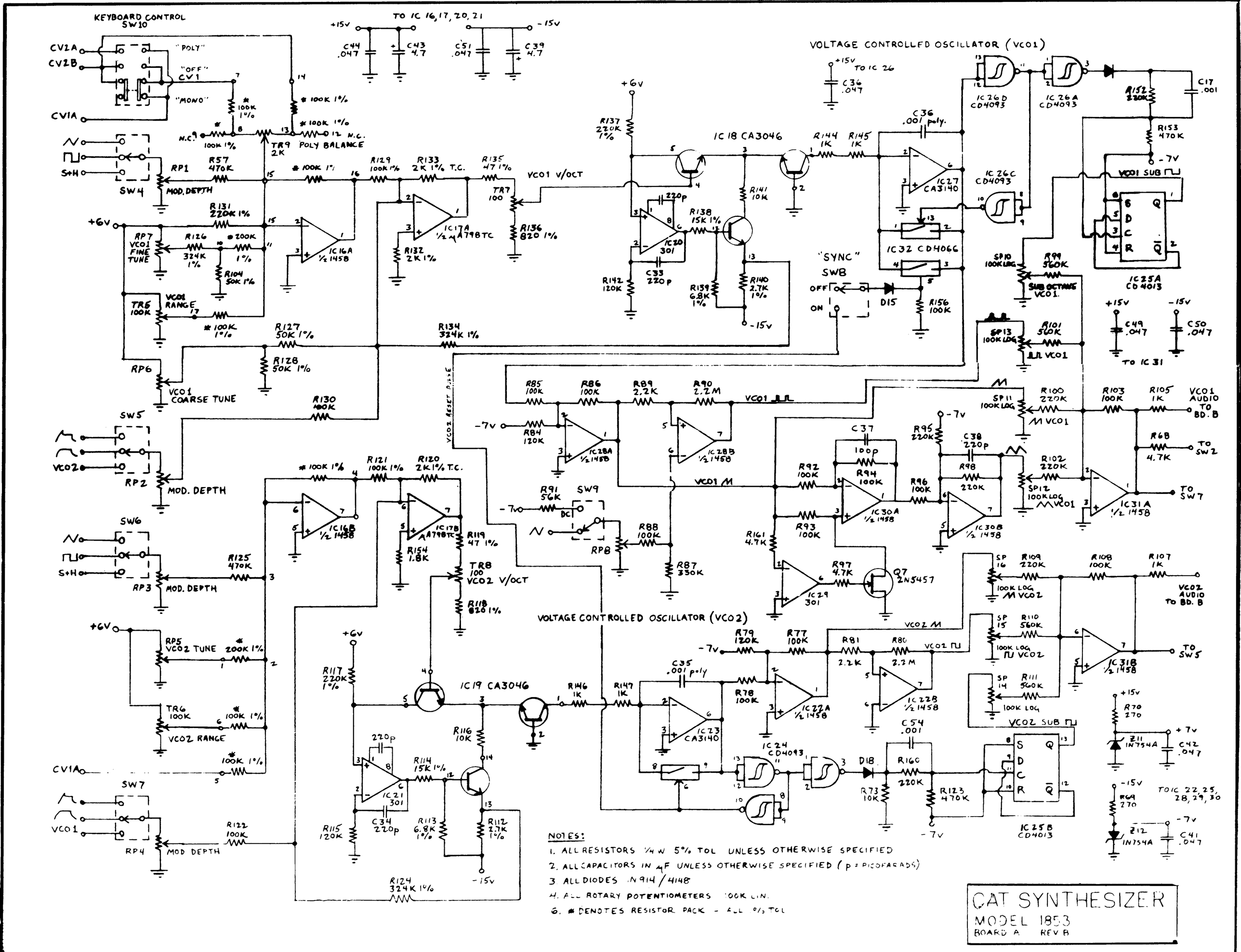
KEYBOARD CONTROL SW10
CV2A
CV2B
CV1A
"POLY"
"OFF"
"MONO"
CV1
TO IC 16,17,20,21
+15v
-15v
C44 .047
C43 4.7
C51 .047
C39 4.7
VOLTAGE CONTROLLED OSCILLATOR (VCO1)
+15v TO IC 26
C36 .047
IC 26D CD4093
IC 26A CD4093
IC 26C CD4093
R152 220K
C17 .001
R153 470K
-7v
VCO1 SUB
IC25A CD4013
N.C.
TR9 2K
POLY BALANCE
S+H
SW4
RP1
R57 470K
MOD. DEPTH
R129 100K 1%
R133 2K 1% T.C.
R135 47 1%
TR7 100
VCO1 V/OCT
R136 820 1%
+6V
R131 220K 1%
RP7 VCO1 FINE TUNE
R126 324K 1%
R104 50K 1%
IC16A 1/2 1458
IC17A 1/2 µA798TC
R132 2K 1%
TR6 100K
VCO1 RANGE
R127 50K 1%
R128 50K 1%
RP6
VCO1 COARSE TUNE
R130 100K
R134 324K 1%
IC 18 CA3046
R137 220K 1%
R141 10K
R138 15K 1%
IC20 301
C33 220p
R142 120K
R139 6.8K 1%
R140 2.7K 1%
-15v
R144 1K
R145 1K
C36 .001 poly.
IC27 CA3140
IC32 CD4066
"SYNC" SW8
OFF
ON
D15
R156 100K
SP10 100K LOG
R99 560K
SUB OCTAVE VCO1
SP13 100K LOG
R101 560K
VCO1
C49 .047
C50 .047
TO IC 31
SW5
VCO2
RP2
MOD. DEPTH
R85 100K
R86 100K
R89 2.2K
R90 2.2M
VCO1
VCO2 RESET PULSE
-7v
R84 120K
IC28A 1/2 1458
IC28B 1/2 1458
VCO1
R91 56K
SW9
DC
RP8
R88 100K
R87 330K
R92 100K
R94 100K
C37 100p
R93 100K
IC30A 1/2 1458
R96 100K
R98 220K
C38 220p
IC30B 1/2 1458
R95 220K
R161 4.7K
R97 4.7K
Q7 2N5457
IC29 301
SP11 100K LOG
R100 220K
R102 220K
SP12 100K LOG
R103 100K
R105 1K
VCO1 AUDIO TO BD. B
R68 4.7K
TO SW2
TO SW7
IC31A 1/2 1458
SW6
S+H
RP3
MOD. DEPTH
R125 470K
R121 100K 1%
R120 2K 1% T.C.
IC16B 1/2 1458
IC17B µA798TC
R154 1.8K
R119 47 1%
TR8 100 VCO2 V/OCT
R118 820 1%
VOLTAGE CONTROLLED OSCILLATOR (VCO2)
SP 16 100K LOG
R109 220K
R108 100K
R107 1K
VCO2 AUDIO TO BD. B
VCO2
RP5 VCO2 TUNE
200K 1%
TR6 100K
VCO2 RANGE
100K 1%
CV1A
SW7
VCO1
RP4
MOD DEPTH
R122 100K
R117 220K 1%
IC19 CA3046
R146 1K
R147 1K
C35 .001 poly
R79 120K
R77 100K
R78 100K
IC22A 1/2 1458
R81 2.2K
R80 2.2M
IC22B 1/2 1458
VCO2
SP 15 100K LOG
R110 560K
IC31B 1/2 1458
TO SW5
SP 14 100K LOG
R111 560K
VCO2 SUB
IC23 CA3140
IC24 CD4093
D18
C54 .001
R160 220K
R73 10K
R123 470K
IC25B CD4013
R70 270
Z11 1N754A
C42 .047
R69 270
Z12 1N754A
C41 .047
TO IC 22,25, 28,29,30
R116 10K
R114 15K 1%
IC21 301
C34 220p
R115 120K
R113 6.8K 1%
R112 2.7K 1%
R124 324K 1%
NOTES:
1. ALL RESISTORS 1/4 W 5% TOL UNLESS OTHERWISE SPECIFIED
2. ALL CAPACITORS IN µF UNLESS OTHERWISE SPECIFIED (p = PICOFARADS)
3. ALL DIODES 1N914 / 4148
4. ALL ROTARY POTENTIOMETERS 100K LIN.
6. # DENOTES RESISTOR PACK - ALL 0% TOL
CAT SYNTHESIZER
MODEL 1853
BOARD A REV B