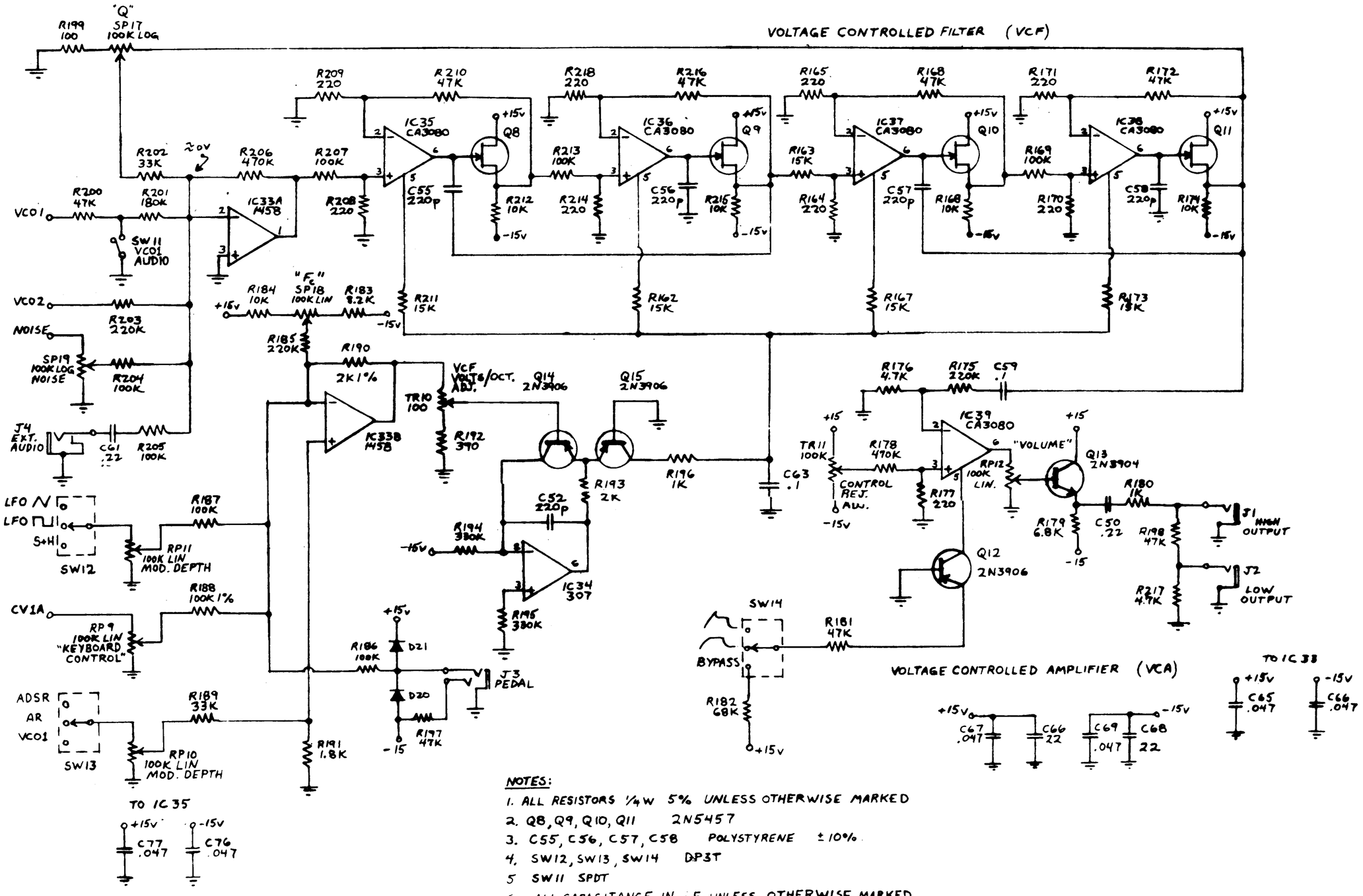

NOTES:

1. ALL RESISTORS 1/4W 5% UNLESS OTHERWISE MARKED
2. Q8, Q9, Q10, Q11 2N5457
3. C55, C56, C57, C58 POLYSTYRENE ± 10%
4. SW12, SW13, SW14 DP3T
5. SW11 SPDT
6. ALL CAPACITANCE IN μF UNLESS OTHERWISE MARKED

CAT SYNTHESIZER
MODEL 1853
BOARD B REV A