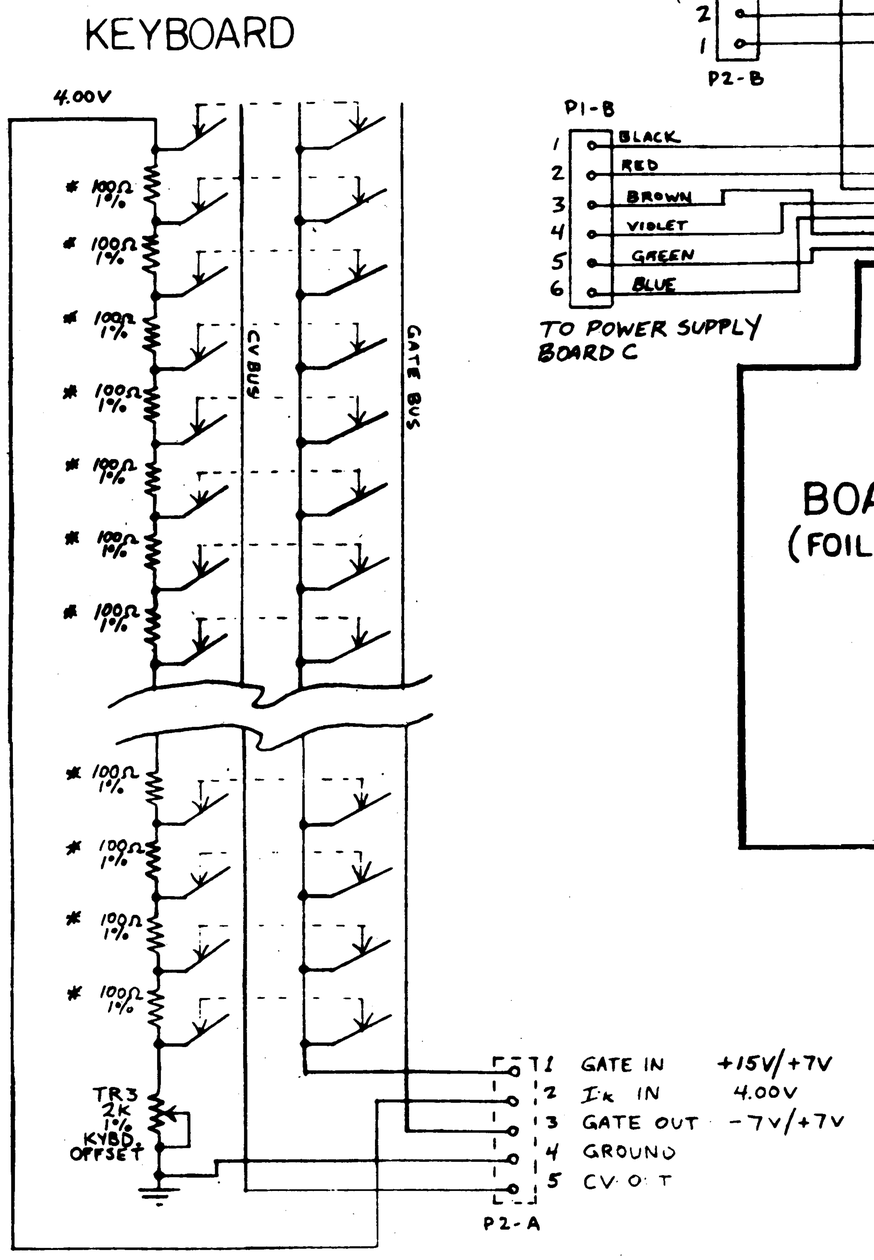

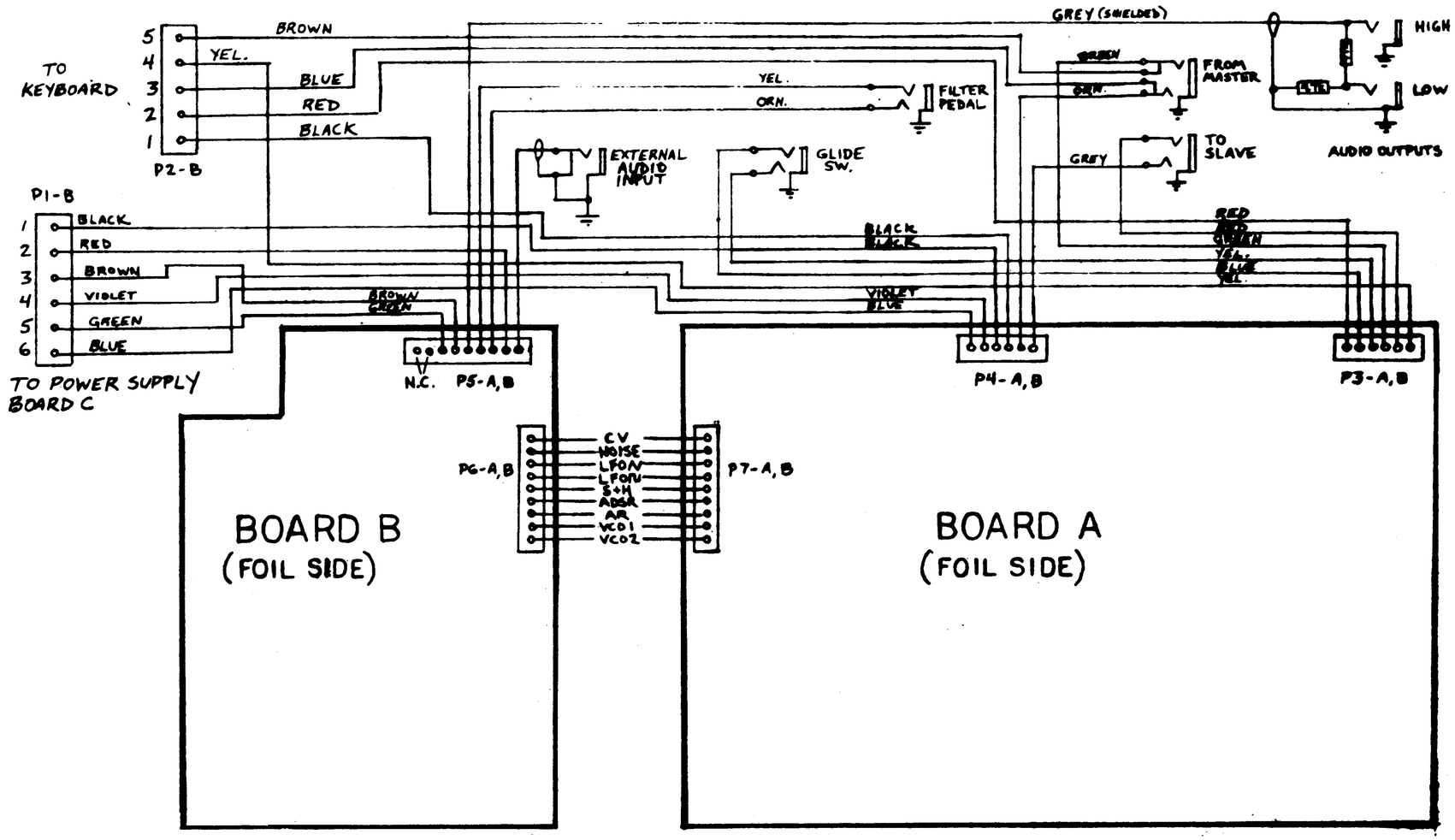

WIRING HARNESS LAYOUT

NOTES:

1. ALL RESISTORS IN OHMS UNLESS OTHERWISE MARKED
2. ALL CAPACITORS IN μF UNLESS OTHERWISE MARKED
3. * DENOTES RESISTOR PACK 1% TOL.
4. 00/00 DENOTES KEY UP/KEY DOWN VOLTAGES

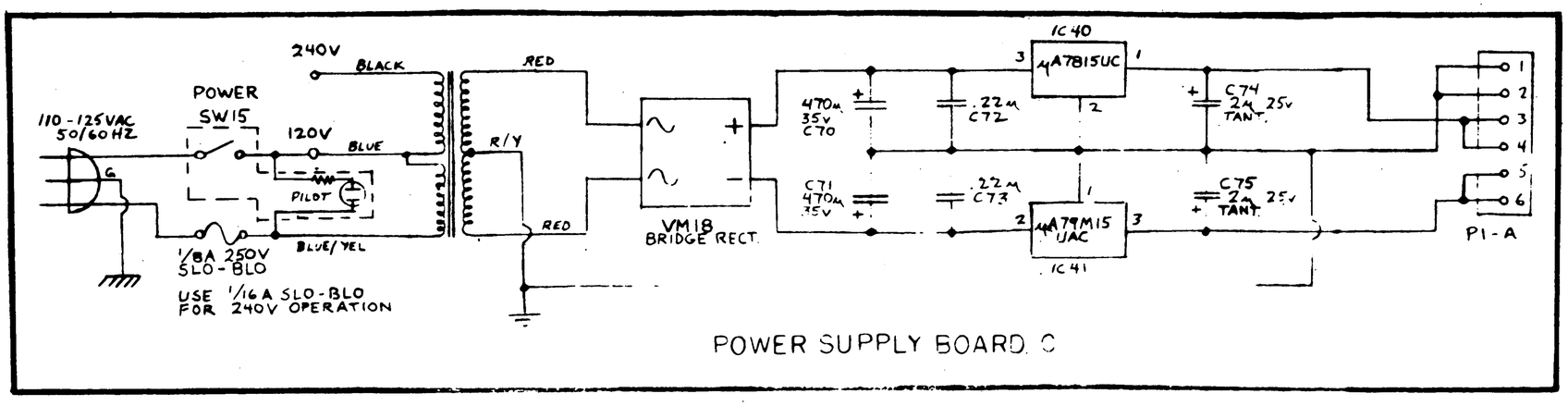
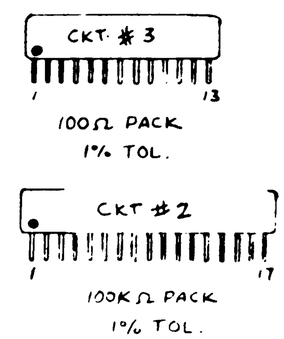
POWER SUPPLY BOARD C